GENERAL MACHINIST

PRACTICAL

VOCATIONAL EDUCATION

HIGHER SECONDARY - FIRST YEAR

A Publication under
Government of Tamilnadu
Distribution of Free Textbook Programme
(NOT FOR SALE)

Untouchability is a sin

Untouchability is a crime

Untouchability is inhuman

**TAMILNADU
TEXTBOOK CORPORATION**
College Road, Chennai - 600 006.

© Government of Tamilnadu
First Edition - 2010

Chairperson

Dr. R. RAJKUMAR,
Head of the Department (Mechanical)
AMK Polytechnic College,
Sembarambakkam, Chennai - 602 103.

Authors

G. JAYAKUMAR JESUDOSS,
Vocational Teacher,
Dharmamurthi Rao Bahadur Calavala Cunnan Chetty's
Hindu Higher Secondary School,
Thiruvallur - 602 001.

C. RAVIVARMAN
Vocational Teacher,
Govt. Boys Higher Secondary School,
Nattrampalli,
Vellore Dist - 635 852.

B. PRABHAKARAN
Vocational Teacher,
Govt. Boys Higher Secondary School,
Vandavasi,
Thiruvannamalai Dist-604 408.

R. ARUMUGAM
Vocational Teacher,
Govt. Boys Higher Secondary School,
Ondipudhur,
Coimbatore - 641 016.

A. VELAYUTHAM
Vocational Teacher,
Govt. Higher Secondary School,
Nemili,
Vellore Dist - 631 051.

This book has been prepared by the Directorate of School Education on behalf of the Government of Tamilnadu

This book has been printed on 60 GSM paper

Printed by Web Offset at :

GENERAL MACHINIST PRACTICAL

HIGHER SECONDARY - FIRST YEAR

Sl.No.	Date	Exercise	Page No.	Signature of the teacher
1		Filing, marking & punching		
2		Hacksaw cutting		
3		'L' cutting		
4		'V' cutting		
5		'T' cutting		
6		'Z' cutting		
7		'⊔' cutting		
8		Step cutting		
9		Triangular cutting		
10		Dovetail cutting		

1. FILING, MARKING & PUNCHING

Aim :

To perform the operations of filing, marking and punching

Tools required :

1. Bench vise
2. Try square
3. Hacksaw frame
4. Scriber
5. Steel rule
6. Punches
7. Flat file - rough
8. Flat file - medium
9. Flat file - smooth
10. Triangular file
11. Hammer
12. Divider
13. Chalk paste
14. Vernier caliper
15. Surface plate

Procedure:

1. The design of the given model is studied completely to understand the features like its size and shape.

2. The given piece of metal is checked for sizes whether it is sufficient for the design.

3. Hand tools and measuring instruments are selected suitably to perform the required operations.

4. The piece of metal (mild steel) is held in the bench vise and two adjacent sides are filed for squareness using a flat file. These two sides are considered prime sides.

GIVEN DESIGN OF THE JOB

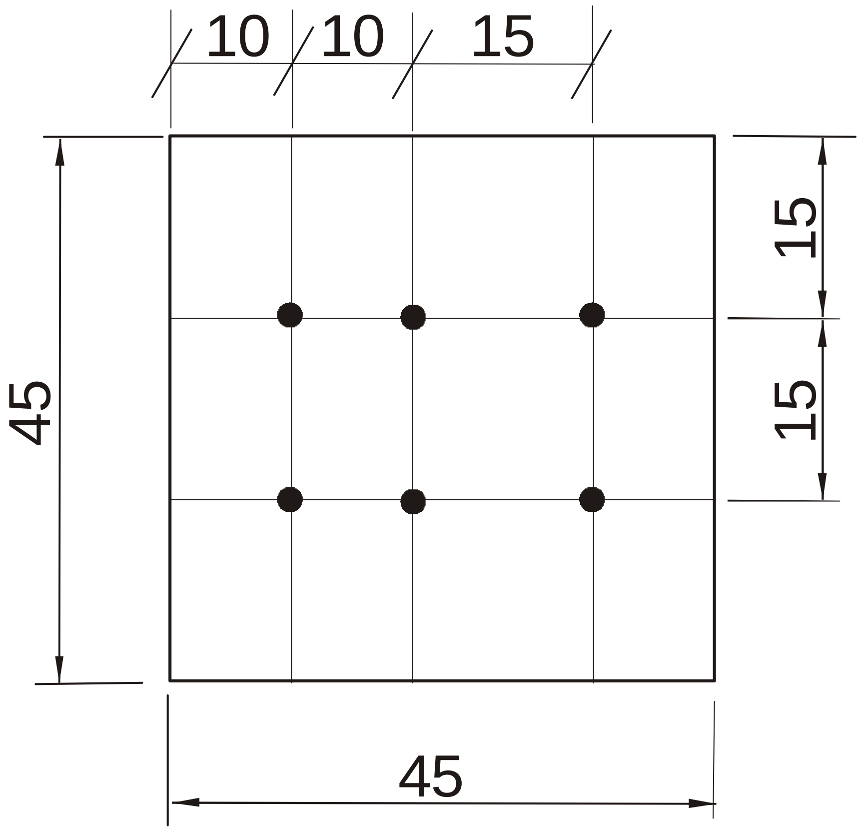

FINISHED WORKPIECE

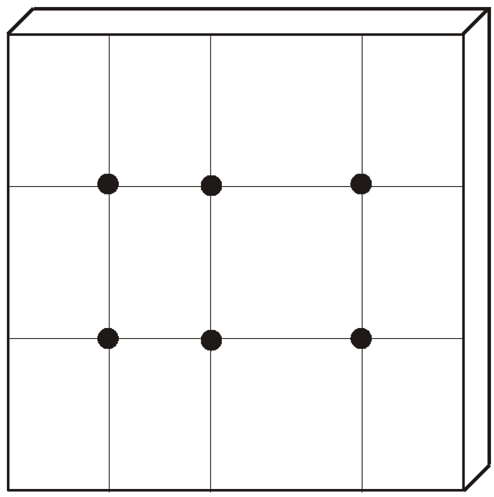

5. The remaining two sides are also filed for squareness (The angle between adjacent sides = 90 degrees). The same is checked with the help of a try-square.

6. The piece of work is checked for 90^0 on all four sides.

7. A thin layer of chalk paste is applied on the flat surface of the metal piece.

8. Chalk is allowed to dry.

9. The given design is scribed on the chalked surface using steel rule, divider and scriber.

10. Punch marks are made at required points on the surface using a dot punch and a hammer.

11. Punch marks are made by keeping the punch inclined at 60^0 so that they are filed off later.

Conclusion :

The operations of square filing, marking and punching are performed according to the given design on the given M.S plate.

GIVEN DESIGN OF THE JOB

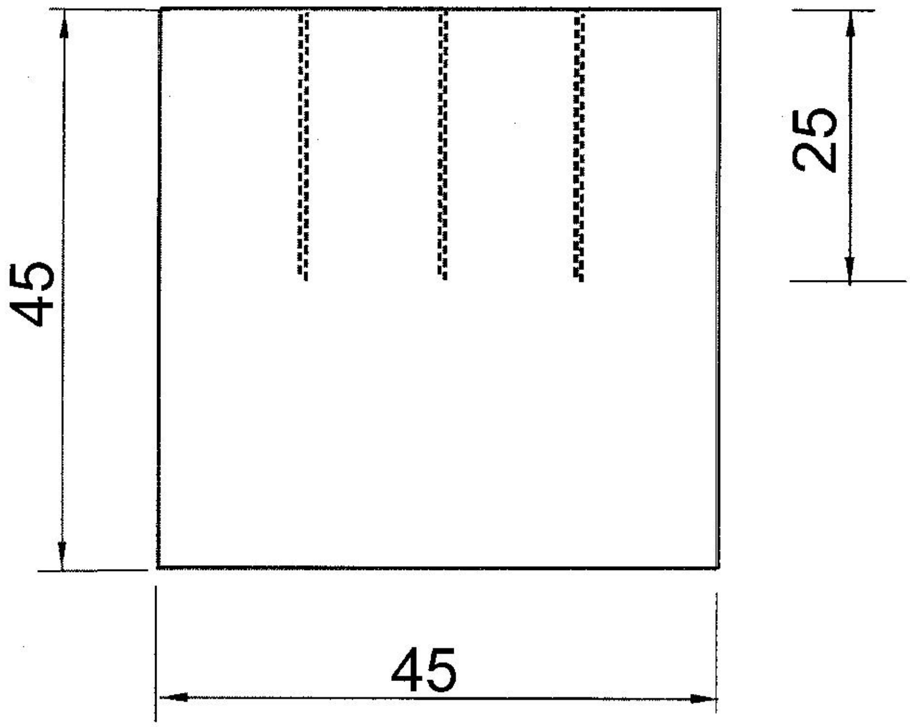

FINISHED WORKPIECE

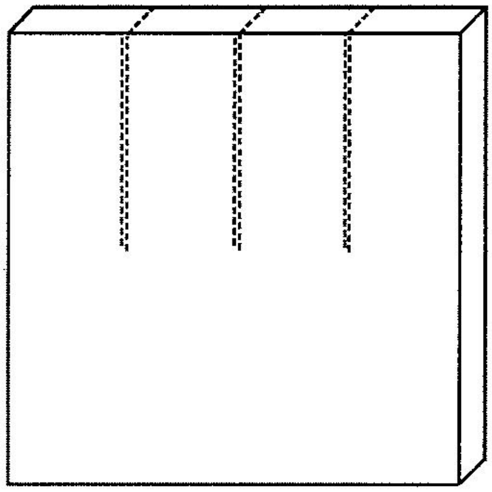

2. HACKSAW CUTTING

Aim :

To perform hacksaw cutting on the gi ven M.S. plate according to the given design

Tools required:

1. Bench vise
2. Try square
3. Hacksaw frame
4. Scriber
5. Steel rule
6. Punches
7. Flat file - rough
8. Flat file - medium
9. Flat file - smooth
10. Triangular file
11. Hammer
12. Divider
13. Chalk paste
14. Vernier caliper
15. Surface plate

Procedure :

1. The design of the given model is studied completely to understand the features like its size and shape.

2. The given piece of metal is checked for sizes whether it is sufficient for the design.

3. Hand tools and measuring instruments are selected suitably to perform the required operations.

4. The piece of metal (mild steel) is held in the bench vise and two adjacent sides are filed for squareness using a flat file. These two sides are considered prime sides.

5. The remaining two sides are also filed for squareness (The angle between adjacent sides = 90 degrees). The same is checked with the help of a try-square.

6. The piece of work is checked for 90^0 on all four sides.

7. A thin layer of chalk paste is applied on the flat surface of the metal piece.

8. Chalk is allowed to dry.

9. Lines are scribed on the chalked surface using steel rule, divider and scriber.

10. Punch marks are made at required points on the surface using a dot punch and a hammer.

11. Punch marks are made by keeping the punch inclined at 60^0 so that they are filed off later.

12. The spacing between adjacent punch marks should be at least 6mm.

13. Hack cuts are made on the metal piece at marked locations.

14. The cuts should be made by making the hacksaw frame stroke for the full length at a medium pace.

Conclusion :

The operations of square filing, marking, punching and hacksaw cutting are performed according to the given design on the given M.S plate.

GIVEN DESIGN OF THE JOB

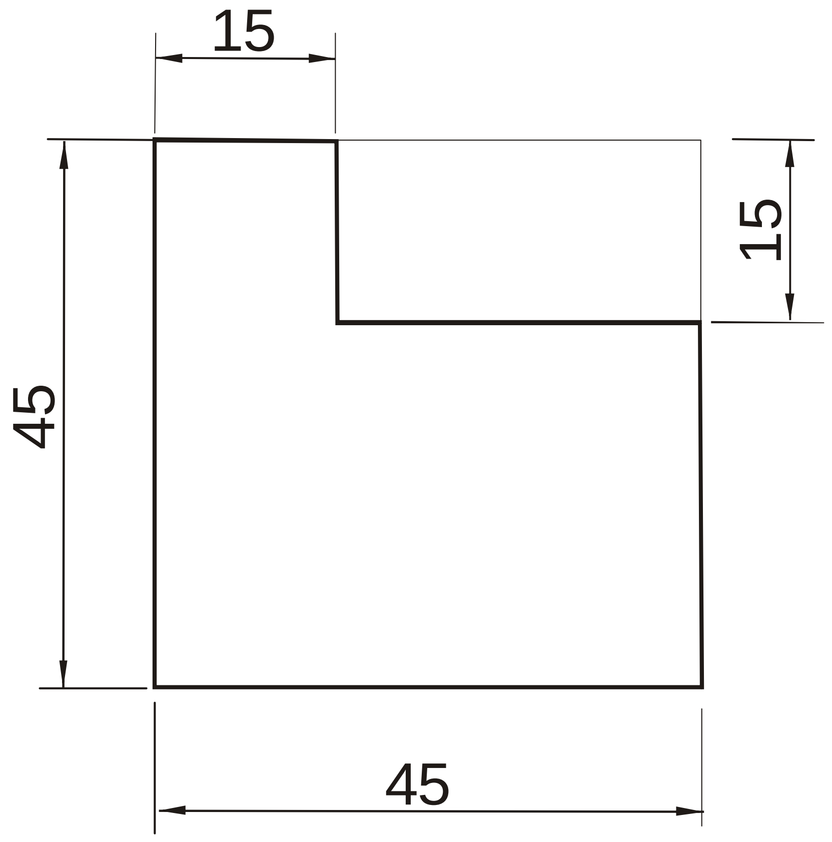

FINISHED WORKPIECE

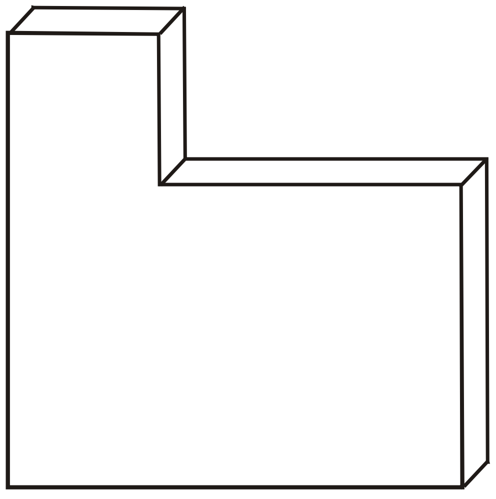

3. 'L' CUTTING

Aim :

To perform 'L' cutting on the given M.S. plate according to the given design

Tools required :

1. Bench vise
2. Try square
3. Hacksaw frame
4. Scriber
5. Steel rule
6. Punches
7. Flat file - rough
8. Flat file - medium
9. Flat file - smooth
10. Triangular file
11. Hammer
12. Divider
13. Chalk paste
14. Vernier caliper
15. Surface plate

Procedure :

1. The design of the given model is studied completely to understand the features like its size and shape.

2. The given piece of metal is checked for sizes whether it is sufficient for the design.

3. Hand tools and measuring instruments are selected suitably to perform the required operations.

4. The piece of metal (mild steel) is held in the bench vise and two adjacent sides are filed for squareness using a flat file. These two sides are considered prime sides.

5. The remaining two sides are also filed for squareness (The angle between adjacent sides = 90 degrees). The same is checked with the help of a try-square.

6. The piece of work is checked for 90^0 on all four sides.

7. A thin layer of chalk paste is applied on the flat surface of the metal piece.

8. Chalk is allowed to dry.

9. The design for ‘L’ shape is clearly scribed on the flat chalked surface with the help of steel rule, divider, try square and scriber as per the given dimensions.

10. Punch marks are made at required points on the surface using a dot punch and a hammer.

11. Punch marks are made by keeping the punch inclined at 60^0 so that they are filed off later.

12. The spacing between adjacent punch marks should be at least 6mm.

13. Thin auxiliary lines are made at a distance of 1.5mm from the punched line.

14. Hack cuts are made on these auxiliary lines. The unwanted portion of the metal piece is removed.

15. The remaining portion of the metal piece is fitted on the bench vise. The rough surface resulting from hacksaw cutting is filed with the help of flat files (rough, medium and smooth)

16. When filing, care is taken that half of the punch mark is retained on the workpiece.

17. The sharp corner of the ‘L’ shape is finish filed with the help of triangular file.

18. The edge surfaces of the workpiece are checked frequently for perpendicularity and parallelism with the help of a try-square.

Conclusion :

The operations of square filing, marking, punching hacksaw cutting and finish filing (for ‘L’ shape) are performed according to the given design on the given M.S plate.

GIVEN DESIGN OF THE JOB

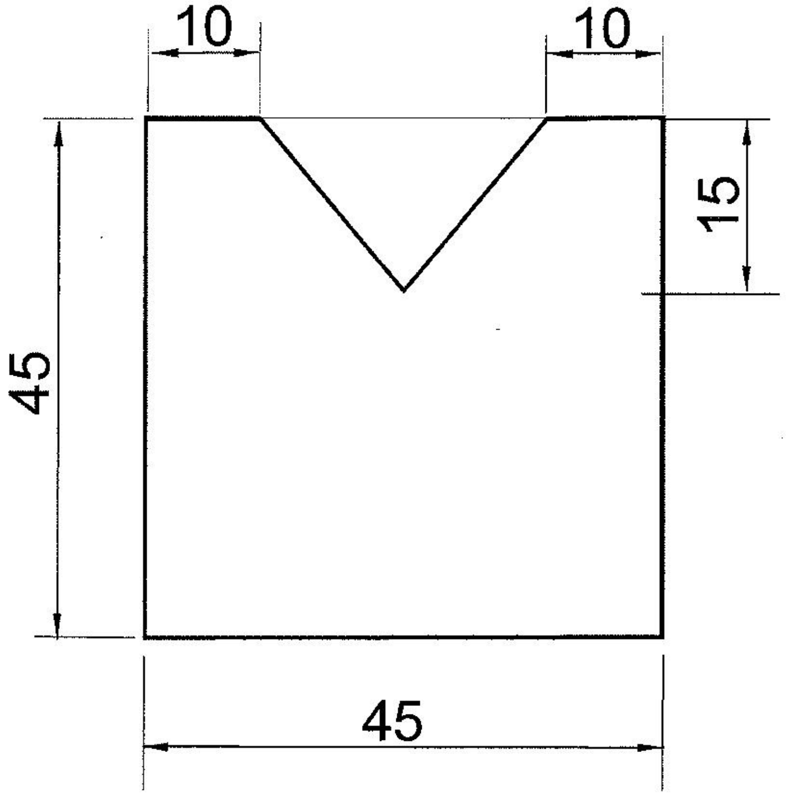

FINISHED WORKPIECE

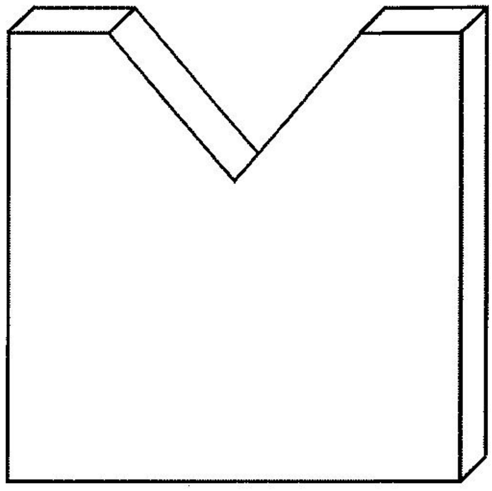

4. ‘V’ CUTTING

Aim :

To perform ‘V’ cutting on the given M.S. plate according to the given design

Tools required :

1. Bench vise
2. Try square
3. Hacksaw frame
4. Scriber
5. Steel rule
6. Punches
7. Flat file - rough
8. Flat file - medium
9. Flat file - smooth
10. Triangular file
11. Hammer
12. Divider
13. Chalk paste
14. Vernier caliper
15. Surface plate
16. Combination set

Procedure :

1. The design of the given model is studied completely to understand the features like its size and shape.

2. The given piece of metal is checked for sizes whether it is sufficient for the design.

3. Hand tools and measuring instruments are selected suitably to perform the required operations.

4. The piece of metal (mild steel) is held in the bench vise and two adjacent sides are filed for squareness using a flat file. These two sides are considered prime sides.

5. The remaining two sides are also filed for squareness (The angle between adjacent sides = 90 degrees). The same is checked with the help of a try-square.

6. The piece of work is checked for 90^0 on all four sides.

7. A thin layer of chalk paste is applied on the flat surface of the metal piece.

8. Chalk is allowed to dry.

9. The design for ‘V’ shape is clearly scribed on the flat chalked surface with the help of steel rule, divider, try square and scriber as per the given dimensions. The angular lines are scribed with the help of the protractor head of a combination set.

10. Punch marks are made at required points on the surface using a dot punch and a hammer.

11. Punch marks are made by keeping the punch inclined at 60^0 so that they are filed off later.

12. The spacing between adjacent punch marks should be at least 6mm.

13. Thin auxiliary lines are made at a distance of 1.5mm from the punched line.

14. Hack cuts are made on these auxiliary lines. The unwanted portion of the metal piece is removed.

15. The remaining portion of the metal piece is fitted on the bench vise. The rough surface resulting from hacksaw cutting is filed with the help of flat files (rough, medium and smooth)

16. When filing, care is taken that half of the punch mark is retained on the workpiece.

17. The sharp corner of the ‘V’ shape is finish filed with the help of triangular file.

18. The edge surfaces of the workpiece are checked frequently for perpendicularity and parallelism with the help of a try-square.

Conclusion :

The operations of square filing, marking, punching hacksaw cutting and finish filing (for ‘V’ shape) are performed according to the given design on the given M.S plate.

GIVEN DESIGN OF THE JOB

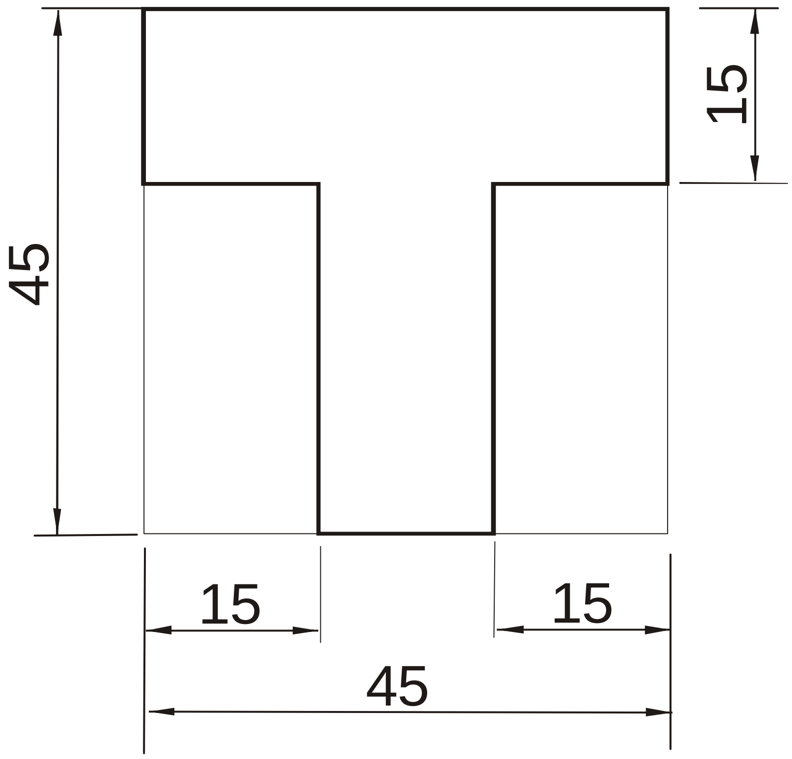

FINISHED WORKPIECE

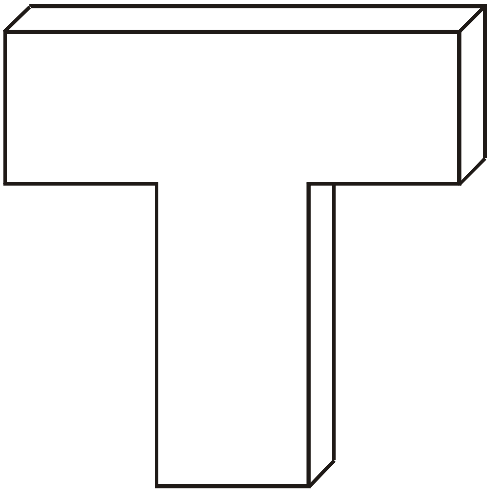

5. 'T' CUTTING

Aim :

To perform 'T' cutting on the given M.S. plate according to the given design

Tools required :

1. Bench vise
2. Try square
3. Hacksaw frame
4. Scriber
5. Steel rule
6. Punches
7. Flat file - rough
8. Flat file - medium
9. Flat file - smooth
10. Triangular file
11. Hammer
12. Divider
13. Chalk paste
14. Vernier caliper
15. Surface plate

Procedure :

1. The design of the given model is studied completely to understand the features like its size and shape.

2. The given piece of metal is checked for sizes whether it is sufficient for the design.

3. Hand tools and measuring instruments are selected suitably to perform the required operations.

4. The piece of metal (mild steel) is held in the bench vise and two adjacent sides are filed for squareness using a flat file. These two sides are considered prime sides.

5. The remaining two sides are also filed for squareness (The angle between adjacent sides = 90 degrees). The same is checked with the help of a try-square.

6. The piece of work is checked for 90^0 on all four sides.

7. A thin layer of chalk paste is applied on the flat surface of the metal piece.

8. Chalk is allowed to dry.

9. The design for ‘T’ shape is clearly scribed on the flat chalked surface with the help of steel rule, divider, try square and scriber as per the given dimensions.

10. Punch marks are made at required points on the surface using a dot punch and a hammer.

11. Punch marks are made by keeping the punch inclined at 60^0 so that they are filed off later.

12. The spacing between adjacent punch marks should be at least 6mm.

13. Thin auxiliary lines are made at a distance of 1.5mm from the punched line.

14. Hack cuts are made on these auxiliary lines. The unwanted portion of the metal piece is removed.

15. The remaining portion of the metal piece is fitted on the bench vise. The rough surface resulting from hacksaw cutting is filed with the help of flat files (rough, medium and smooth)

16. When filing, care is taken that half of the punch mark is retained on the workpiece.

17. The sharp corner of the ‘T’ shape is finish filed with the help of triangular file.

18. The edge surfaces of the workpiece are checked frequently for perpendicularity and parallelism with the help of a try-square.

Conclusion :

The operations of square filing, marking, punching hacksaw cutting and finish filing (for ‘T’ shape) are performed according to the given design on the given M.S plate.

GIVEN DESIGN OF THE JOB

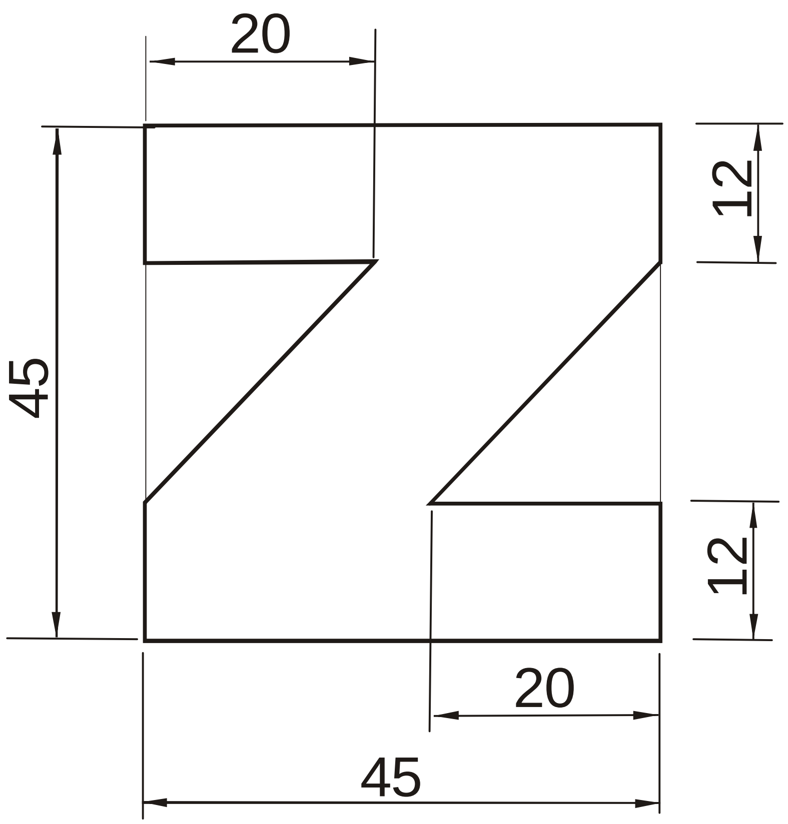

FINISHED WORKPIECE

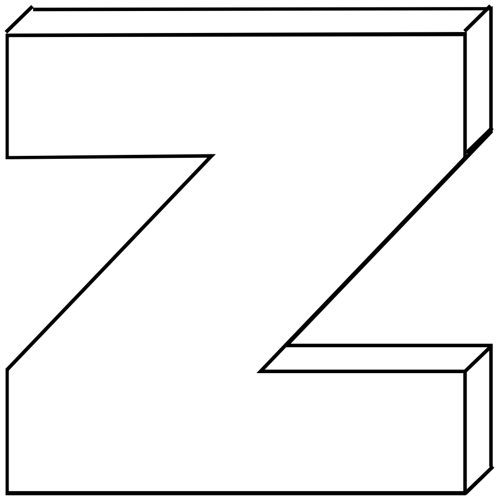

6. ‘Z’ CUTTING

Aim :

To perform ‘Z’ cutting on the given M.S. plate according to the given design

Tools required :

1. Bench vise
2. Try square
3. Hacksaw frame
4. Scriber
5. Steel rule
6. Punches
7. Flat file - rough
8. Flat file - medium
9. Flat file - smooth
10. Triangular file
11. Hammer
12. Divider
13. Chalk paste
14. Vernier caliper
15. Surface plate
16. Protractor
17. Combination set

Procedure :

1. The design of the given model is studied completely to understand the features like its size and shape.

2. The given piece of metal is checked for sizes whether it is sufficient for the design.

3. Hand tools and measuring instruments are selected suitably to perform the required operations.

4. The piece of metal (mild steel) is held in the bench vise and two adjacent sides are filed for squareness using a flat file. These two sides are considered prime sides.

5. The remaining two sides are also filed for squareness (The angle between adjacent sides = 90 degrees). The same is checked with the help of a try-square.

6. The piece of work is checked for 90^0 on all four sides.

7. A thin layer of chalk paste is applied on the flat surface of the metal piece.

8. Chalk is allowed to dry.

9. The design for ‘V’ shape is clearly scribed on the flat chalked surface with the help of steel rule, divider, try square and scriber as per the given dimensions. The angular lines are scribed with the help of a protractor or the protractor head of a combination set.

10. Punch marks are made at required points on the surface using a dot punch and a hammer.

11. Punch marks are made by keeping the punch inclined at 60^0 so that they are filed off later.

12. The spacing between adjacent punch marks should be at least 6mm.

13. Thin auxiliary lines are made at a distance of 1.5mm from the punched line.

14. Hack cuts are made on these auxiliary lines. The unwanted portion of the metal piece is removed.

15. The remaining portion of the metal piece is fitted on the bench vise. The rough surface resulting from hacksaw cutting is filed with the help of flat files (rough, medium and smooth)

16. When filing, care is taken that half of the punch mark is retained on the workpiece.

17. The sharp corner of the ‘Z’ shape is finish filed with the help of triangular file.

18. The edge surfaces of the workpiece are checked frequently for perpendicularity and parallelism with the help of a try-square.

Conclusion :

The operations of square filing, marking, punching hacksaw cutting and finish filing (for ‘Z’ shape) are performed according to the given design on the given M.S plate.

GIVEN DESIGN OF THE JOB

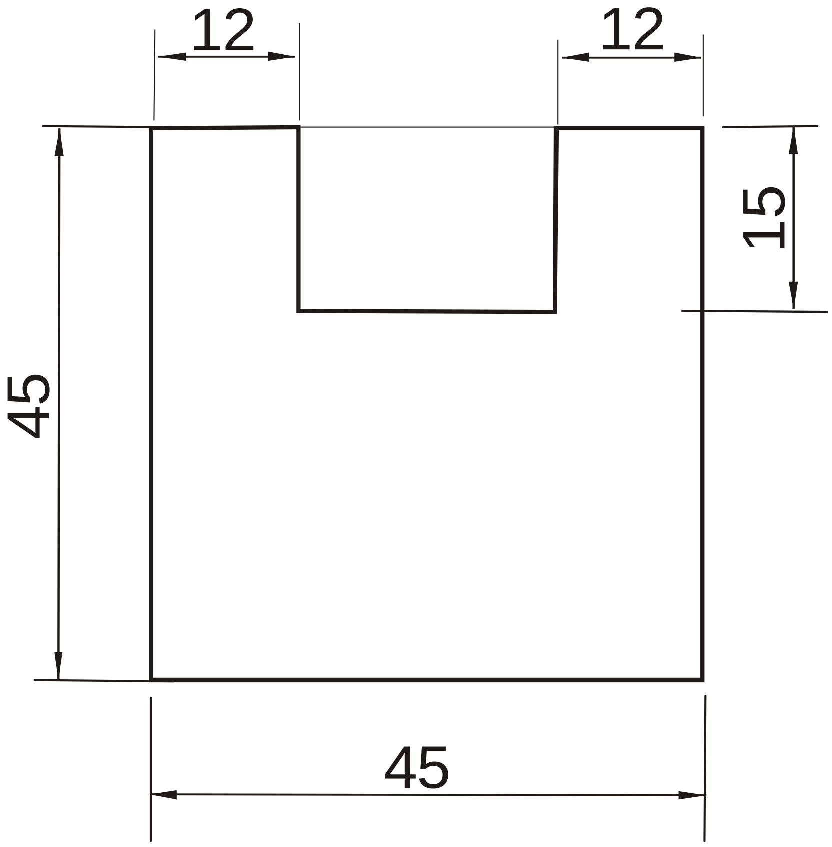

FINISHED WORKPIECE

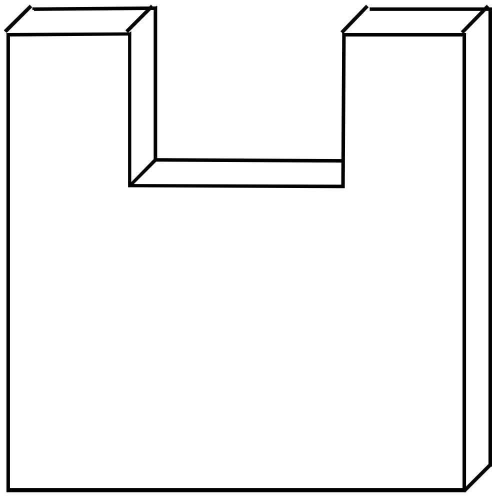

7. '⊔' CUTTING

Aim :

To perform '⊔' cutting on the given M.S. plate according to the given design

Tools required :

1. Bench vise
2. Try square
3. Hacksaw frame
4. Scriber
5. Steel rule
6. Punches
7. Flat file - rough
8. Flat file - medium
9. Flat file - smooth
10. Triangular file
11. Hammer
12. Divider
13. Chalk paste
14. Vernier caliper
15. Surface plate

Procedure :

1. The design of the given model is studied completely to understand the features like its size and shape.

2. The given piece of metal is checked for sizes whether it is sufficient for the design.

3. Hand tools and measuring instruments are selected suitably to perform the required operations.

4. The piece of metal (mild steel) is held in the bench vise and two adjacent sides are filed for squareness using a flat file. These two sides are considered prime sides.

5. The remaining two sides are also filed for squareness (The angle between adjacent sides = 90 degrees). The same is checked with the help of a try-square.

6. The piece of work is checked for 90^0 on all four sides.

7. A thin layer of chalk paste is applied on the flat surface of the metal piece.

8. Chalk is allowed to dry.

9. The design for '⊔' shape is clearly scribed on the flat chalked surface with the help of steel rule, divider, try square and scriber as per the given dimensions.

10. Punch marks are made at required points on the surface using a dot punch and a hammer.

11. Punch marks are made by keeping the punch inclined at 60^0 so that they are filed off later.

12. The spacing between adjacent punch marks should be at least 6mm.

13. Thin auxiliary lines are made at a distance of 1.5mm on both the vertical sides of the shape '⊔'.

14. Hack cuts are made on these two auxiliary lines.

15. One more hacksaw cut is made starting from the top of one of the vertical cuts, moving diagonally to meet another vertical cut at the bottom.

16. Another diagonal cut is made to remove almost all the unwanted portion of the metal piece.

17. The remaining portion of the metal piece is fitted on the bench vise. The rough surface resulting from hacksaw cutting is filed with the help of flat files (rough, medium and smooth)

18. When filing, care is taken that half of the punch mark is retained on the workpiece.

19. The sharp corner of the '⊔' shape is finish filed with the help of triangular file.

20. The edge surfaces of the workpiece are checked frequently for perpendicularity and parallelism with the help of a try-square.

Conclusion :

The operations of square filing, marking, punching hacksaw cutting and finish filing (for '⊔' shape) are performed according to the given design on the given M.S plate.

GIVEN DESIGN OF THE JOB

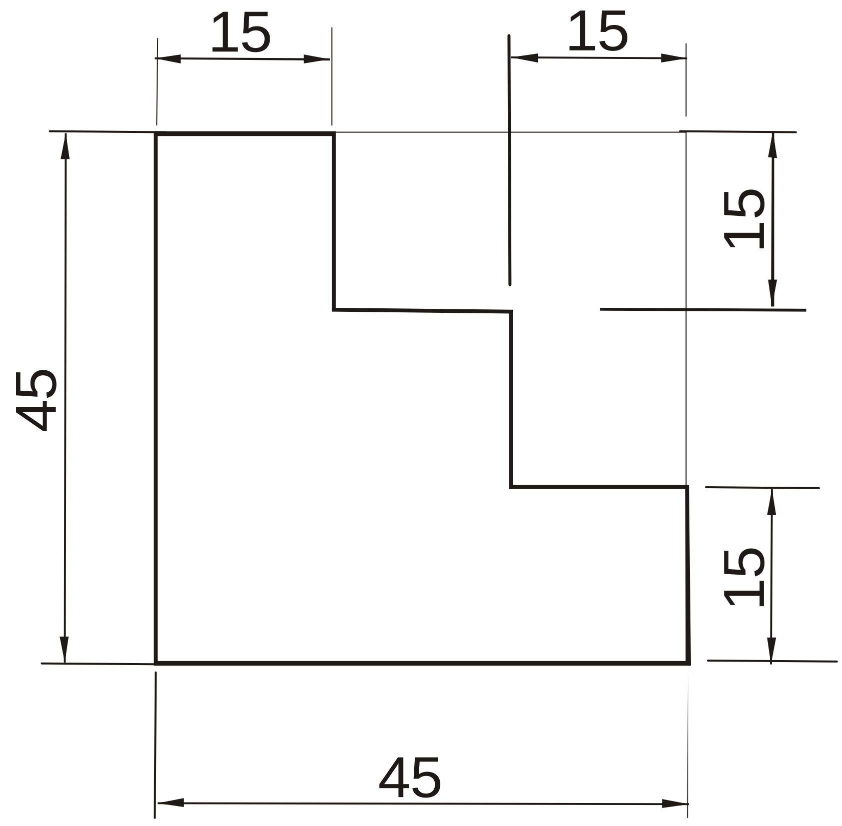

FINISHED WORKPIECE

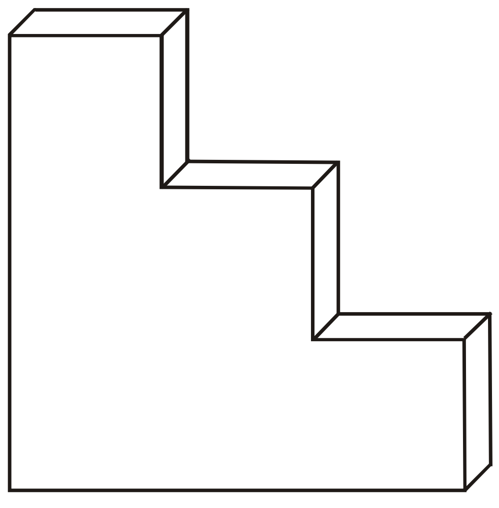

8. STEP CUTTING

Aim :

To perform step cutting on the given M.S. plate according to the given design

Tools required :

1. Bench vise
2. Try square
3. Hacksaw frame
4. Scriber
5. Steel rule
6. Punches
7. Flat file - rough
8. Flat file - medium
9. Flat file - smooth
10. Triangular file
11. Hammer
12. Divider
13. Chalk paste
14. Vernier caliper
15. Surface plate

Procedure :

1. The design of the given model is studied completely to understand the features like its size and shape.

2. The given piece of metal is checked for sizes whether it is sufficient for the design.

3. Hand tools and measuring instruments are selected suitably to perform the required operations.

4. The piece of metal (mild steel) is held in the bench vise and two adjacent sides are filed for squareness using a flat file. These two sides are considered prime sides.

5. The remaining two sides are also filed for squareness (The angle between adjacent sides = 90 degrees). The same is checked with the help of a try-square.

6. The piece of work is checked for 90^0 on all four sides.

7. A thin layer of chalk paste is applied on the flat surface of the metal piece.

8. Chalk is allowed to dry.

9. The give design in the form of steps is clearly scribed on the flat chalked surface with the help of steel rule, divider, try square and scriber as per the given dimensions.

10. Punch marks are made at required points on the surface using a dot punch and a hammer.

11. Punch marks are made by keeping the punch inclined at 60^0 so that they are filed off later.

12. The spacing between adjacent punch marks should be at least 6mm.

13. Thin auxiliary lines are made at a distance of 1.5mm from the punched line.

14. Hack cuts are made on these auxiliary lines. The unwanted portion of the metal piece is removed.

15. The remaining portion of the metal piece is fitted on the bench vise. The rough surface resulting from hacksaw cutting is filed with the help of flat files (rough, medium and smooth)

16. When filing, care is taken that half of the punch mark is retained on the workpiece.

17. The sharp corners of the steps are finish filed with the help of triangular file.

18. The edge surfaces of the workpiece are checked frequently for perpendicularity and parallelism with the help of a try-square.

Conclusion :

The operations of square filing, marking, punching hacksaw cutting and finish filing (for step cutting) are performed according to the given design on the given M.S plate.

GIVEN DESIGN OF THE JOB

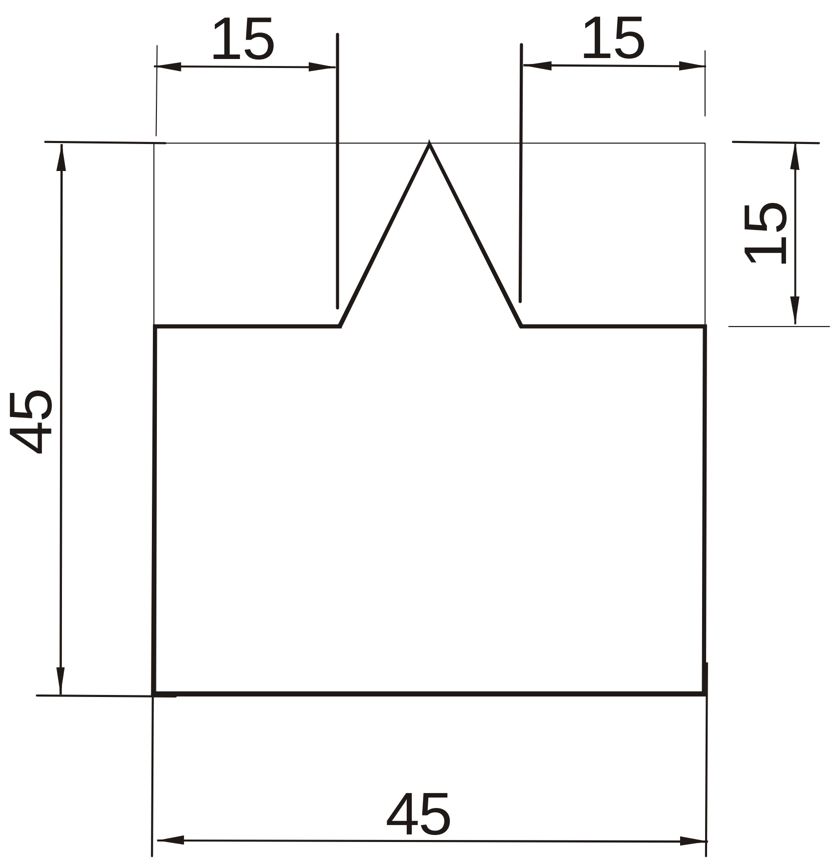

FINISHED WORKPIECE

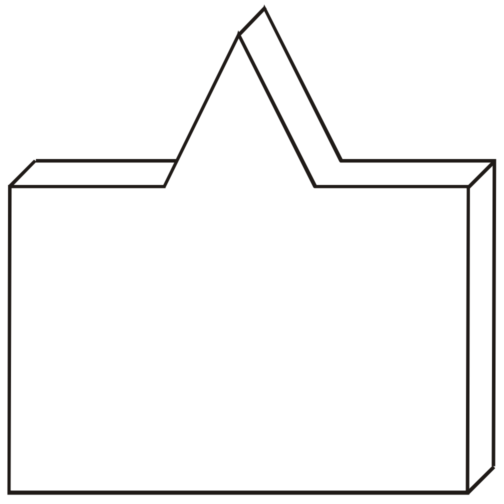

9. TRIANGULAR CUTTING

Aim :

To perform triangular cutting on the given M.S. plate according to the given design

Tools required :

1. Bench vise
2. Try square
3. Hacksaw frame
4. Scriber
5. Steel rule
6. Punches
7. Flat file - rough
8. Flat file - medium
9. Flat file - smooth
10. Triangular file
11. Hammer
12. Divider
13. Chalk paste
14. Vernier caliper
15. Surface plate
16. Protractor
17. Combination set

Procedure :

1. The design of the given model is studied completely to understand the features like its size and shape.

2. The given piece of metal is checked for sizes whether it is sufficient for the design.

3. Hand tools and measuring instruments are selected suitably to perform the required operations.

4. The piece of metal (mild steel) is held in the bench vise and two adjacent sides are filed for squareness using a flat file. These two sides are considered prime sides.

5. The remaining two sides are also filed for squareness (The angle between adjacent sides = 90 degrees). The same is checked with the help of a try-square.

6. The piece of work is checked for 90^0 on all four sides.

7. A thin layer of chalk paste is applied on the flat surface of the metal piece.

8. Chalk is allowed to dry.

9. The design of triangular form is clearly scribed on the flat chalked surface with the help of steel rule, divider, try square and scriber as per the given dimensions. The angular lines are scribed with the help of a protractor or the protractor head of a combination set.

10. Punch marks are made at required points on the surface using a dot punch and a hammer.

11. Punch marks are made by keeping the punch inclined at 60^0 so that they are filed off later.

12. The spacing between adjacent punch marks should be at least 6mm.

13. Thin auxiliary lines are made at a distance of 1.5mm from the punched line.

14. Hack cuts are made on these auxiliary lines. The unwanted portion of the metal piece is removed.

15. The remaining portion of the metal piece is fitted on the bench vise. The rough surface resulting from hacksaw cutting is filed with the help of flat files (rough, medium and smooth)

16. When filing, care is taken that half of the punch mark is retained on the workpiece.

17. The sharp corners of the triangular shape are finish filed with the help of triangular file.

18. The edge surfaces of the workpiece are checked frequently for perpendicularity and parallelism with the help of a try-square.

Conclusion :

The operations of square filing, marking, punching hacksaw cutting and finish filing (for triangular rcutting) are performed according to the given design on the given M.S plate.

GIVEN DESIGN OF THE JOB

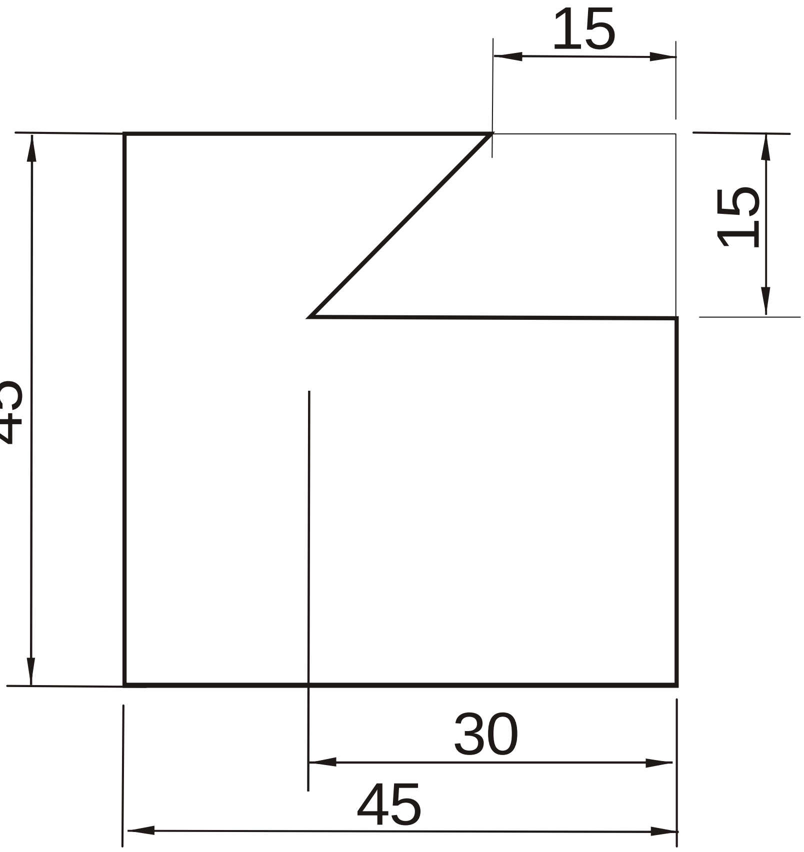

FINISHED WORKPIECE

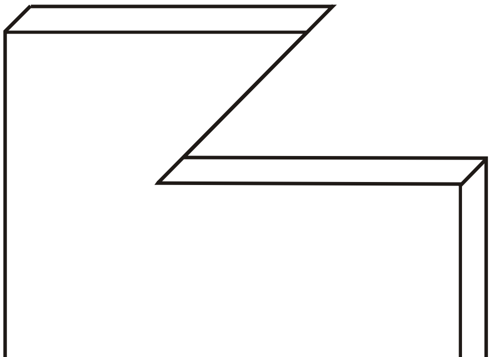

10. DOVETAIL CUTTING (Single side)

Aim :

To perform dovetail cutting (single side) on the given M.S. plate according to the given design

Tools required :

1. Bench vise
2. Try square
3. Hacksaw frame
4. Scriber
5. Steel rule
6. Punches
7. Flat file - rough
8. Flat file - medium
9. Flat file - smooth
10. Triangular file
11. Hammer
12. Divider
13. Chalk paste
14. Vernier caliper
15. Surface plate
16. Protractor
17. Combination set

Procedure :

1. The design of the given model is studied completely to understand the features like its size and shape.

2. The given piece of metal is checked for sizes whether it is sufficient for the design.

3. Hand tools and measuring instruments are selected suitably to perform the required operations.

4. The piece of metal (mild steel) is held in the bench vise and two adjacent sides are filed for squareness using a flat file. These two sides are considered prime sides.

5. The remaining two sides are also filed for squareness (The angle between adjacent sides = 90 degrees). The same is checked with the help of a try-square.

6. The piece of work is checked for 90^0 on all four sides.

7. A thin layer of chalk paste is applied on the flat surface of the metal piece.

8. Chalk is allowed to dry.

9. The design of dovetail cutting (single side) is clearly scribed on the flat chalked surface with the help of steel rule, divider, try square and scriber as per the given dimensions. The angular lines are scribed with the help of a protractor or the protractor head of a combination set.

10. Punch marks are made at required points on the surface using a dot punch and a hammer.

11. Punch marks are made by keeping the punch inclined at 60^0 so that they are filed off later.

12. The spacing between adjacent punch marks should be at least 6mm.

13. Thin auxiliary lines are made at a distance of 1.5mm from the punched line.

14. Hack cuts are made on these auxiliary lines. The unwanted portion of the metal piece is removed.

15. The remaining portion of the metal piece is fitted on the bench vise. The rough surface resulting from hacksaw cutting is filed with the help of flat files (rough, medium and smooth)

16. When filing, care is taken that half of the punch mark is retained on the workpiece.

17. The sharp corner of the dovetail cutting (single side) is finish filed with the help of triangular file.

18. The edge surfaces of the workpiece are checked frequently for perpendicularity and parallelism with the help of a try-square.

Conclusion :

The operations of square filing, marking, punching hacksaw cutting and finish filing (for dovetail cutting - single side) are performed according to the given design on the given M.S plate.

General guidelines for fitting work

In this modern era, automatic machines are used for manufacturing in small, medium and heavy industries. But fitting and bench work finds an important place in completing and finishing a job to the desired accuracy. Some components that come out after machining processess require some minor operations to be performed by hand tools. Fitting work is an important method in doing this. Fitting is the assembling of parts together and removing them for necessary fit. Both these types of work require many number of hand tools, devices and equipments.

Fitting of parts are made with different kinds of fits. It may be arranged where the fit is tight, loose or very loose. The parts may be arranged to move together with no relative movement or rotational and sliding relative movement. The tools used in a fitting workshop are dealt in the later section.

Observation exercise for students :

We happen to see various machine tools in engineering shops. We see the sliding and rotating parts are made to fit into each other by Dovetail joints, T - joints, L - joints triangular joints and as holes and shafts. These joints should be closely watched to understand their nature and their respective uses.

For example, in a lathe - the parts of the assembly of carriage - saddle, cross-slide and compound slide. Observe these joints for their shape and purpose.

Obsrve the top o fthe table of a shaping machine - What is the shape of the slots made on it? What is its purpose?

Again in the shaping machine, the ram reciprocates on the column. Observe the joint between the top of the column and bottom of the ram for their shape and purpose.

Observe the method of joining of the parts column, knee, saddle and table of a milling machine. These parts are joined by different methods of joining and for different purposes.

Likewise different parts of different machine tools are joined by different methods for obtaining different utilities.

We can also observe some house-hold articles are also joined by different methods.

1. The cap and the body of the bottles that we use daily. How are they joined ?

2. The tiffin-carrier. How are the set of dishes held together ?

3. Hot-cases. How is the lid joined with the base ?

4. The base vessel and the lid of the pressure cooker. What are methods by which they are joined ? Why ?

5. The regulator of the L.P.G cylinder. How is it fitted with the cylinder ?

6. The frames and the doors of the windows. How are they fitted ?

7. Day-to-day usages of waist belts, pen caps, cell phone panels and wrist watch straps. Observe how they are fastened ?

8. Observe the domestic water line taps. How are they opened and closed ?

9. The water pipelines made out in our localities for distribution. How are they connected ?

10. The drums and the tyres of automobiles. How are they fitted ?

By observation we find that different parts are connected or fitted or joined by different methods. Taking these examples in mind we should realise that the manufacturing processess involve joining of various components to accomplish different purposes.

Tools used in fitting workshop :

There are different types of tools used in fitting shop and they are classified as

1. Marking tools - Steel rule, protractor, divider, trammel, punches, try square, surface gauge etc.,
2. Measuring devices and instruments- Different types of gauges, vernier calipers, micrometers, combination set, slip gauges etc.,
3. Holding and supporting tools - Different types of vices, V block, marking table, surface plate etc.,
4. Striking tools - Different types of hammers
5. Cutting tools - Files, Scrapers, Chisels and hacksaw blades
6. Tightening tools - Pliers, spanners and wrenches

Some of the tools used in the fitting shop are illustrated here :

1. Steel rule

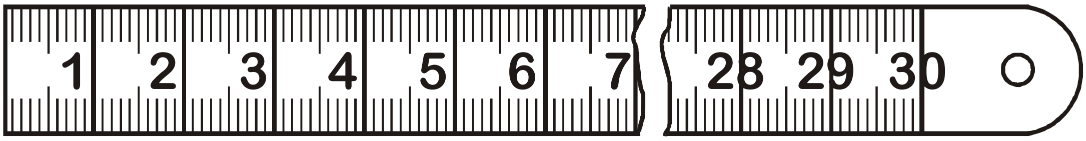

It is one of the most useful tools in a workshop for taking linear measurements and scribing straight lines.

2. Surface plate

The flatness of a surface of a work can be tested with the help of a surface plate. It is also used for marking-out work.

3. Scribers

Scribers are used to mark dimensions and to scribe lines on the workpieces.

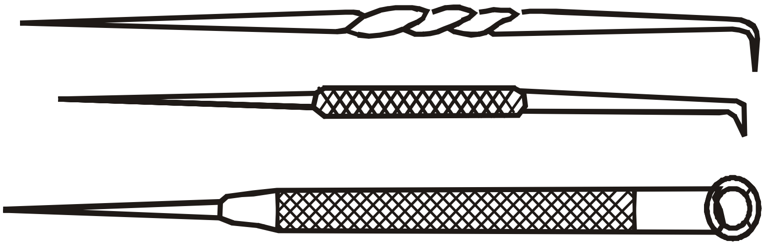

4. Punches

Punches are used to make permanent marks on the lines already scribed on the workpieces. The punch marks make the line appear clearly. Punches are also used to make marks on exact locations on the workpieces where drilling is to be performed. Punch marks are made at regular intervals on the lines (interval may be 6mm for straight lines and 3mm for curved lines).

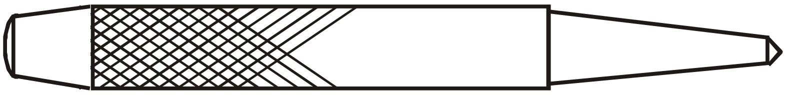

5. Try square

Try square is used to check the perpendicularity of surfaces (both external and internal) It is also useful in scribing parallel lines perpendicular to a particular surface and to check flatness of surfaces.

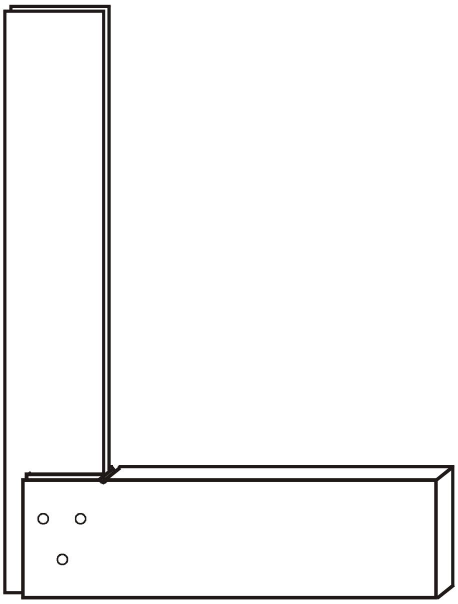

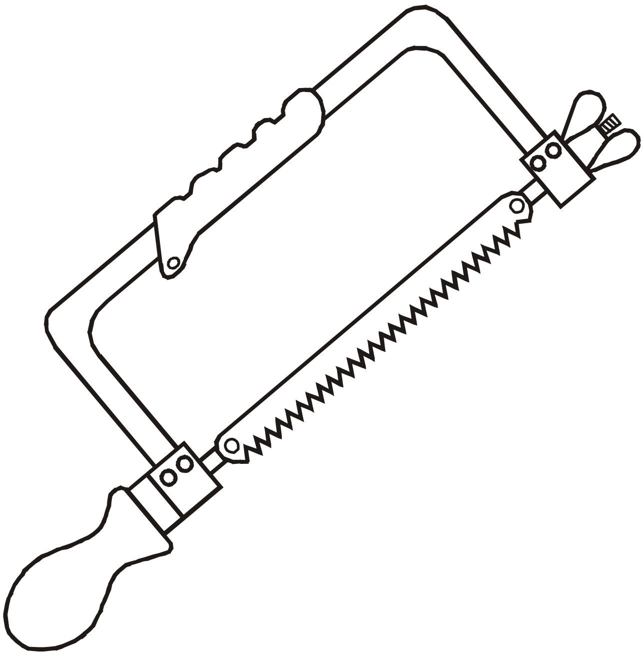

6. Hacksaw

It is used for sawing all metals except hardened steel. It consists of a frame and a blade.

7. Fles

A file is a hardened steel tool having slanted and parallel rows of cutting edges or teeth on its surfaces. It is used to cut, smooth or fit metal parts. It cuts all materials except hardened steel. Small quantities of unrequired metal can be removed with files. Metal burrs leftout after chiseling and hacksaw cutting are removed with the help of files.

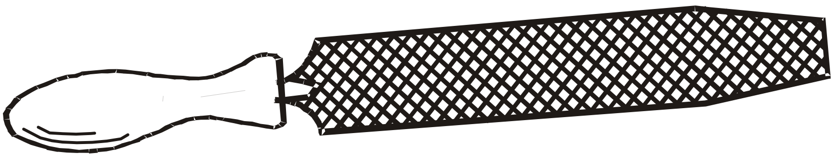

8. Vice

Vise is generally used to hold workpieces when operations like drilling, filing, chiseling and hacksaw cutting are performed on them.

The different types of vises used in a shop are Bench vise, Hand vise, Leg vise, Pipe vise, Pin vise, Tool maker's vise, Machine vise, Swivel vise, Universal vise.

General Workshop safety precautions

1. The layout of machines in the workshop should be suitably done considering proper lighting and ventilation.

2. First- aid box containing proper medicine and instruments should be kept always ready in a workshop.

3. Inflammable materials should be kept in safe places with proper precautions.

4. Round and cylindrical objects, sharp articles and tools should not be found in pathways for it may cause injuries to the workers.

5. Oil and grease should not be found spilled inside the workshop.

6. Hot objects should be kept separately wherein messages like “HOT”, “DO NOT TOUCH” are displayed.

Safety precautions regarding operators

1. Operators should wear tight clothings. They should avoid wearing loose dresses.

2. Operator should not wear ties and bows while working.

3. The dress code of the operator does not allow him to wear small towel or clothes around his neck or on shoulders.

4. Operator should wear only leather footwear.

5. While performing operations like grinding, welding and chiseling, the operator should wear safety goggles.

6. Metal chips should not be cleaned with bare hands but with proper brushes.

7. Safety plates and equipments should be installed before the machine is set on for operation.

8. The operator should wear gloves while handling hot and sharp articles.

9. The operator should resist himself from changing the speed, marking or lubricating on functioning machines.

10. The operator should seek the help of others while handling heavy and fragile materials.

11. Strict code of discipline should be followed in the workshop. Running, playing and chatting with others are to be avoided in the workshop.

12. The operator should not rest his body on the machines at any time, when working on them.

13. The operator should prefer working on machines which are familiar to him.

14. The operator should not touch unsafe and un -insulated electrical wires.